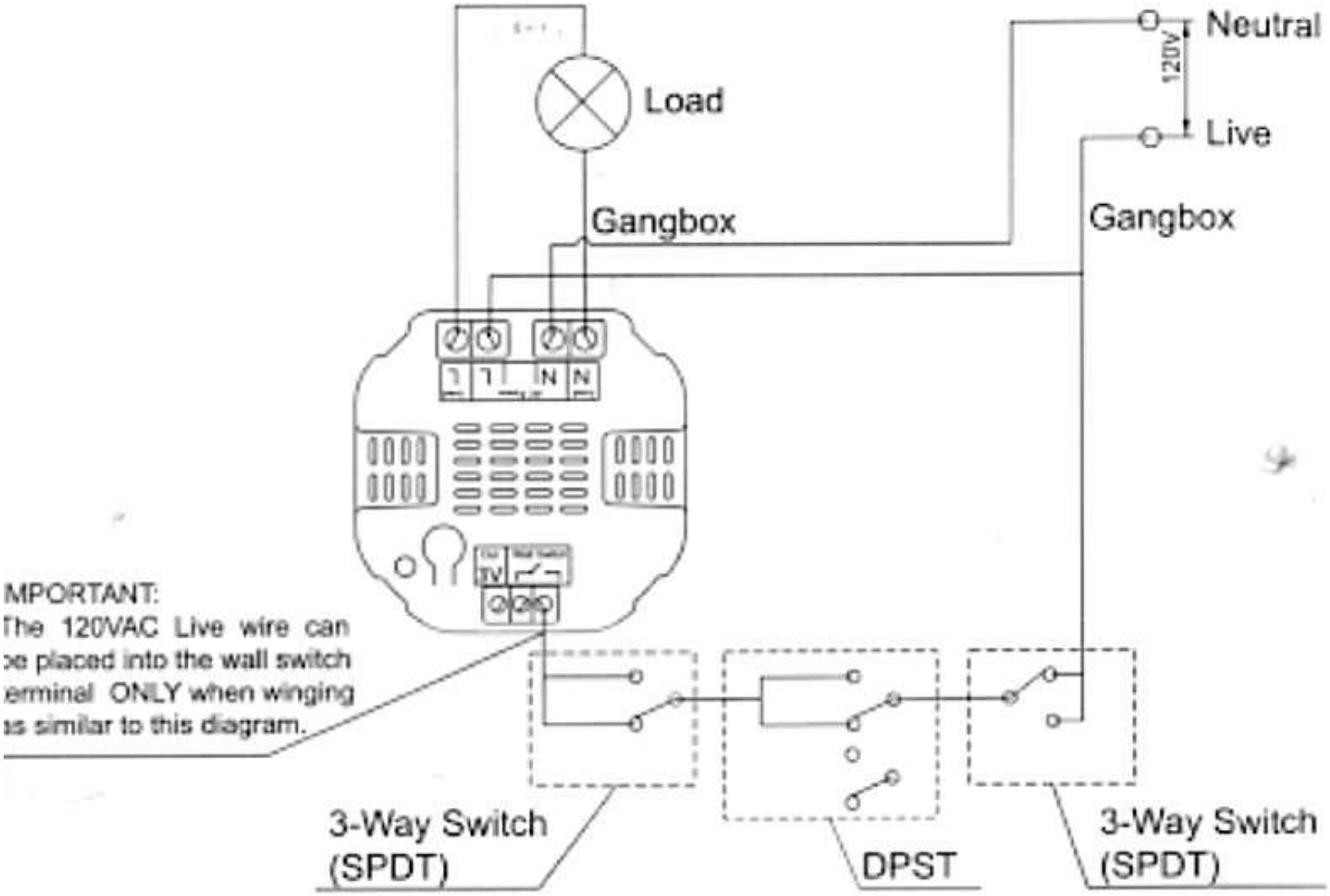Diagram: 3-Way connectiong